X3/4.5

Style:

:

:

:

:

:

369 mm
558 mm
345 mm

00

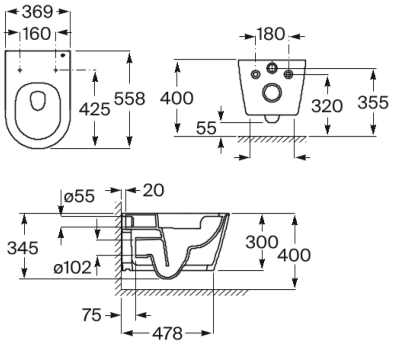

© Copyright 2026, Roca Sanitario, S.A. - All rights reserved | 22-07-2026 | https://www.roca.cn//x-34-5-34652A..C?sku=A34652A00C

© Copyright 2026, Roca Sanitario, S.A. - All rights reserved | 22-07-2026 | https://www.roca.cn//x-34-5-34652A..C?sku=A34652A00C